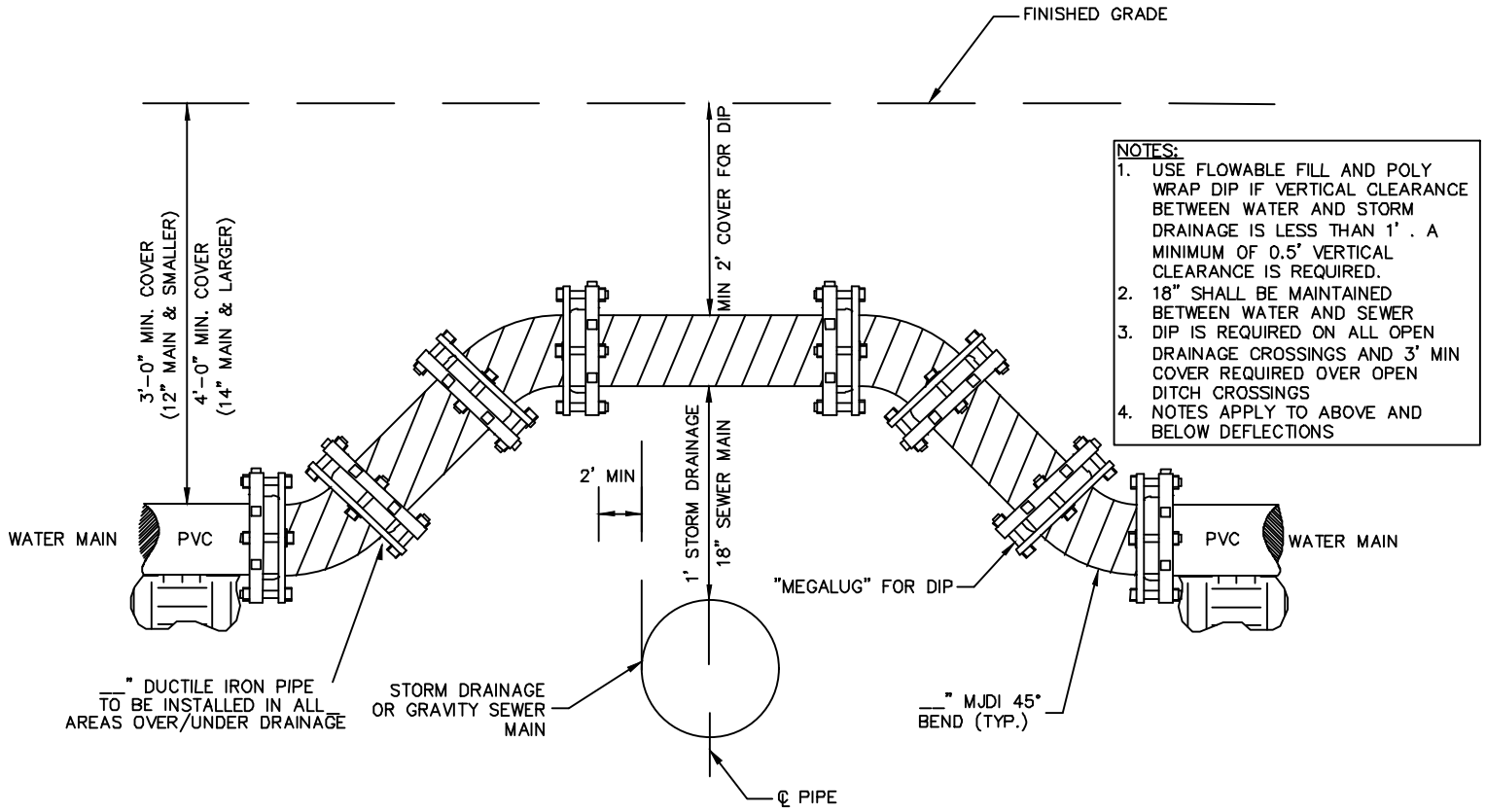

NOTES:
1. USE FLOWABLE FILL AND POLY WRAP DIP IF VERTICAL CLEARANCE BETWEEN WATER AND STORM DRAINAGE IS LESS THAN 1' . A MINIMUM OF 0.5' VERTICAL CLEARANCE IS REQUIRED.
2. 18" SHALL BE MAINTAINED BETWEEN WATER AND SEWER
3. DIP IS REQUIRED ON ALL OPEN DRAINAGE CROSSINGS AND 3' MIN COVER REQUIRED OVER OPEN DITCH CROSSINGS
4. NOTES APPLY TO ABOVE AND BELOW DEFLECTIONS

TYPICAL WATER MAIN DEFLECTION ABOVE

NOT TO SCALE

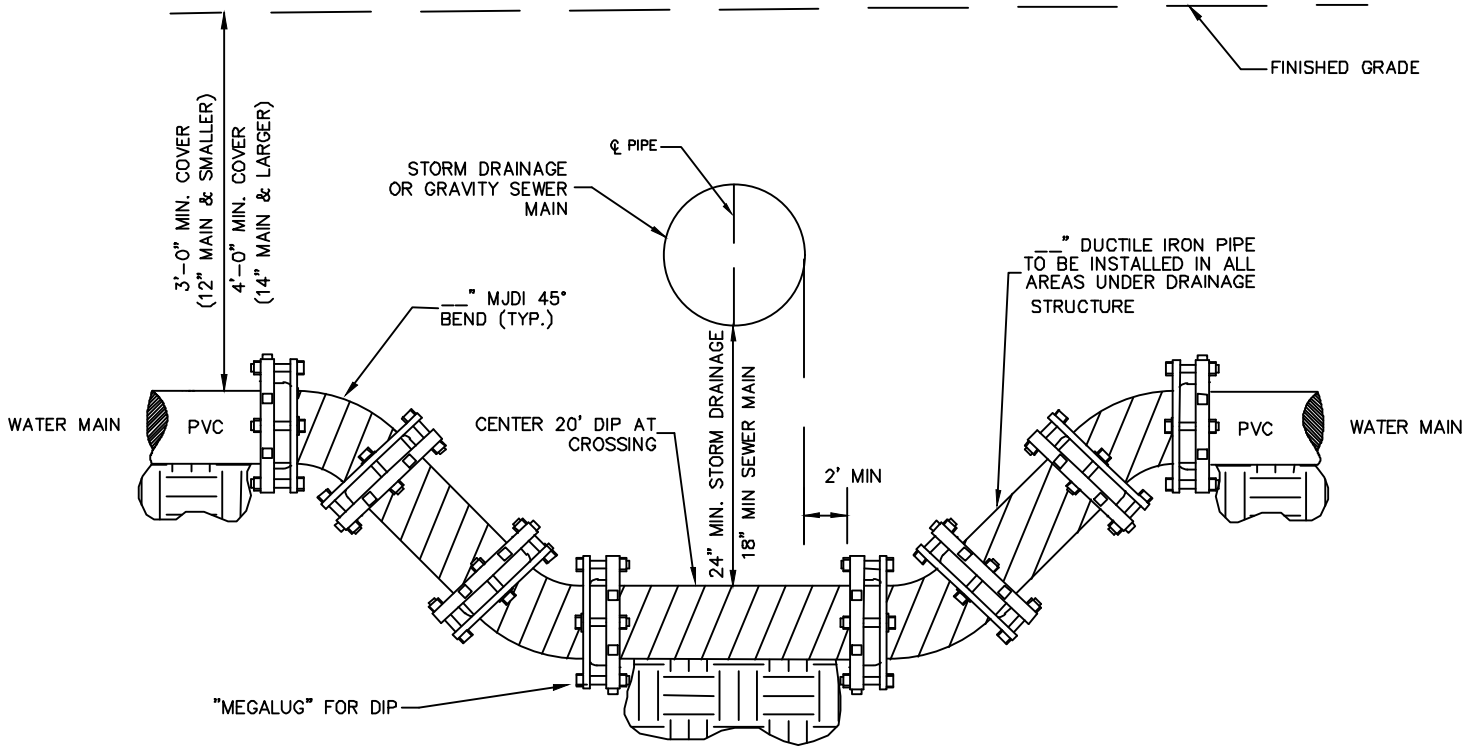

TYPICAL WATER MAIN DEFLECTION BELOW

NOT TO SCALE

BERKELEY COUNTY WATER AND SANITATION
POTABLE WATER & SANITARY SEWER STANDARDS
REVIEWED JULY/2025